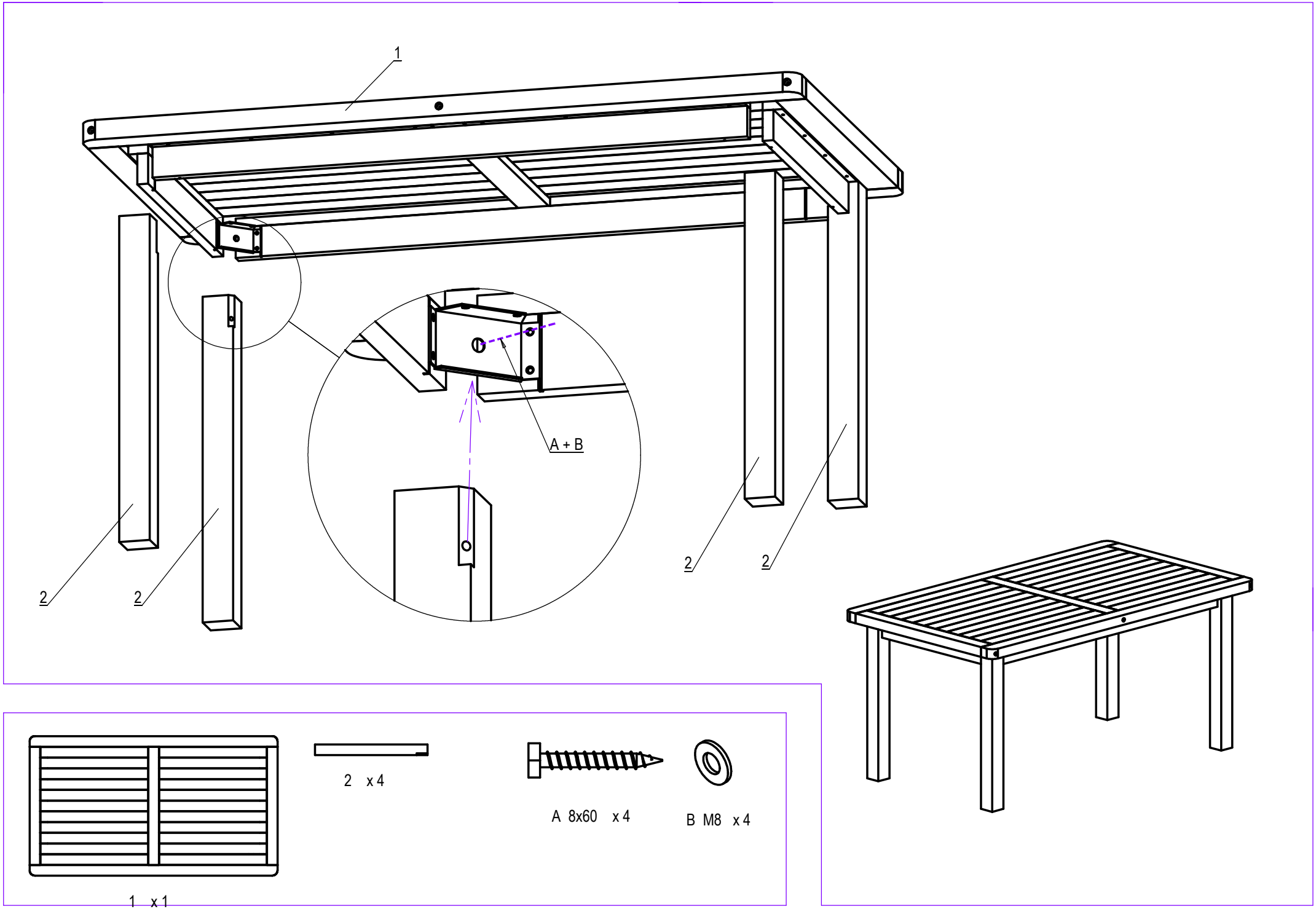
1
2
2
2
2
A + B
1 x 1
2 x 4
A 8x60 x 4
B M8 x 4